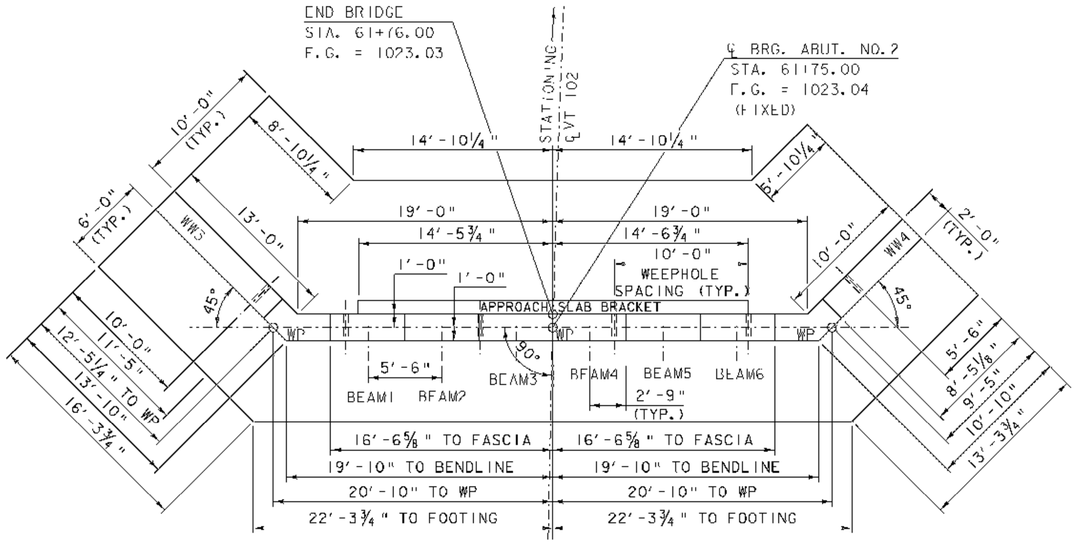

ABUTMENT NO. 2 PLAN

SCALE 3/16" = 1'-0

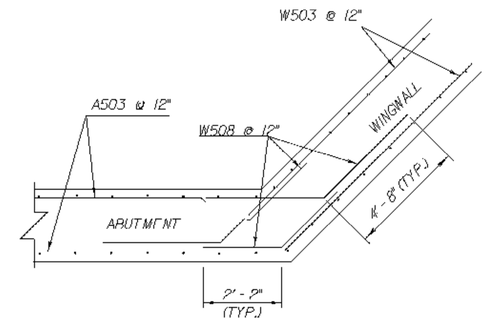

WINGWALL CORNER DETAIL FOR 45° OR UNDER

WINGWALL CORNER DETAIL (BELOW BRIDGE SEAT)

NOT TO SCALE

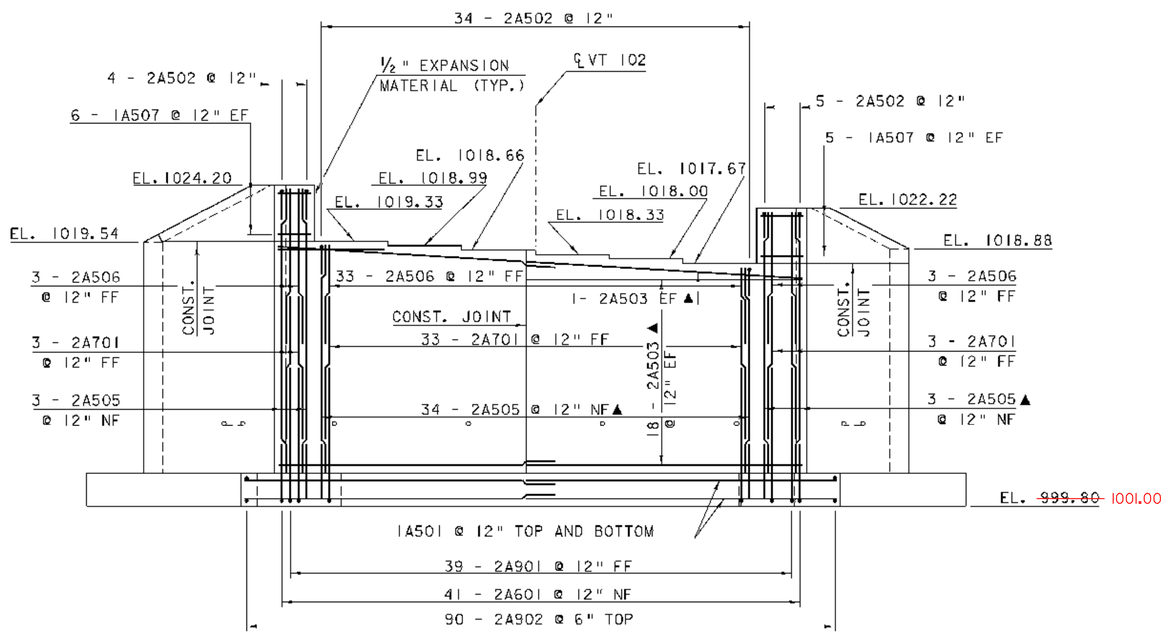

ABUTMENT NO. 2 ELEVATION

SCALE 3/16" = 1'-0

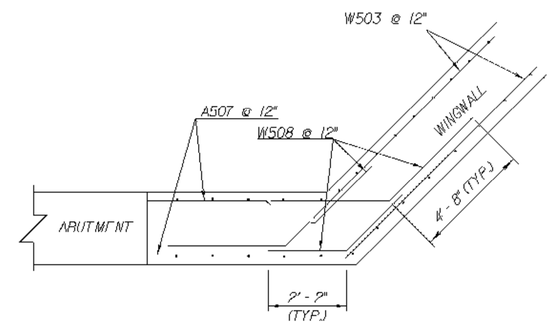

WINGWALL CORNER DETAIL FOR 45° OR UNDER

WINGWALL CORNER DETAIL (ABOVE BRIDGE SEAT)

NOT TO SCALE

NOTE:

NF = NEAR FACE
FF = FAR FACE
EF = EACH FACE
▲ = CUT TO FIT IN FIELD
3" CLEAR, UNLESS OTHERWISE SPECIFIED ON THE PLANS.
2'-2" BAR LAP UNLESS OTHERWISE SPECIFIED ON THE PLANS.

ALL DIMENSIONS ARE TAKEN FROM THE MAJOR CHORD NOT FROM THE ℄ OF VT 102

ABUTMENT #2 DETAILS

PROJECT NAME: CANAAN	
PROJECT NUMBER: ER ST 0271(16)	
FILE NAME: 04c098/struc./s04c098sup	PLOT DATE: 18-AUG-2008
PROJECT LEADER: M. EVANS-MONGEON	DRAWN BY: C. JOLLY
DESIGNED BY: S.SCRIBNER	CHECKED BY: S. SCRIBNER
	SHEET 45 OF 66